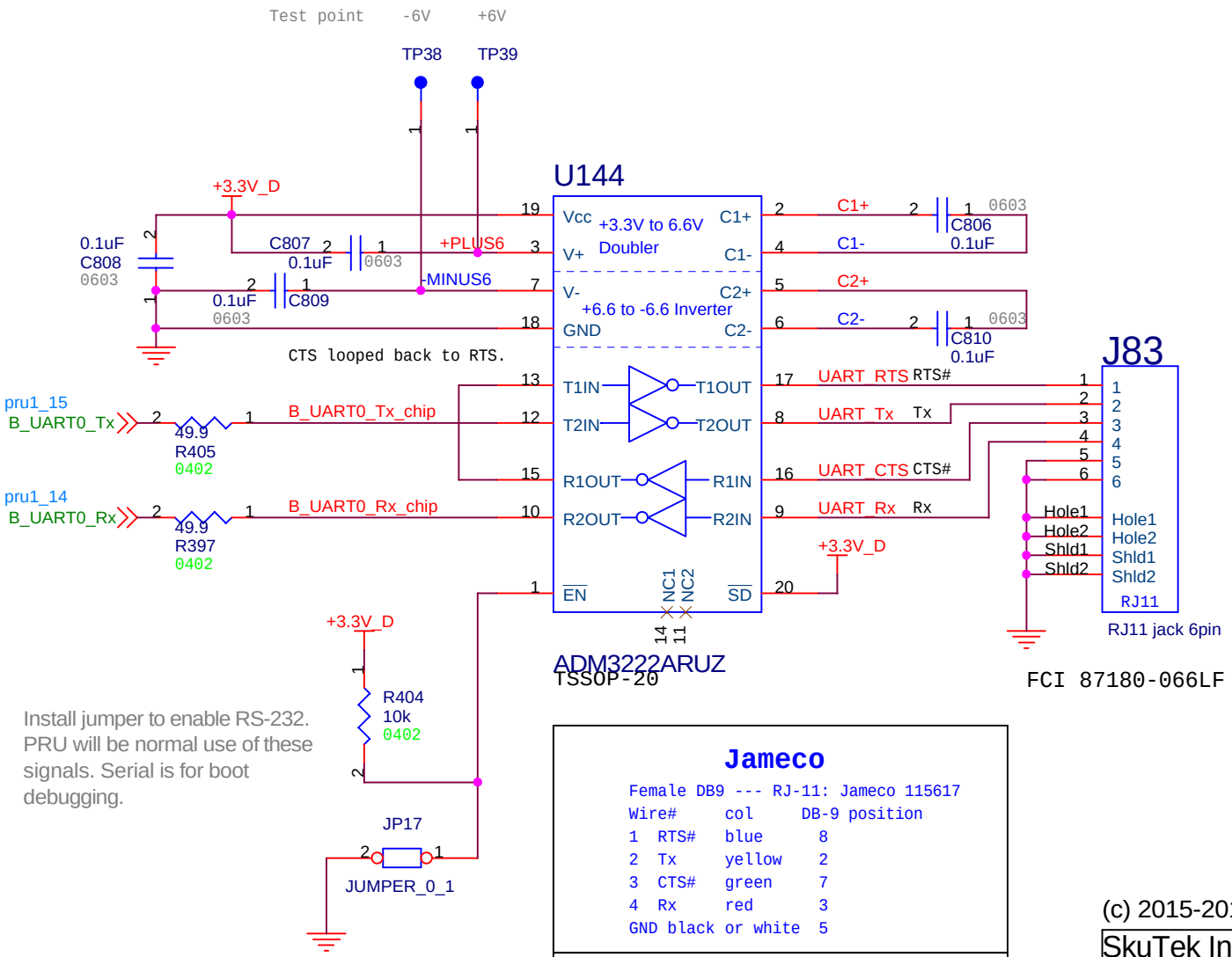

Jameco

Female DB9 --- RJ-11: Jameco 115617

Wire#		col	DB-9 position
1	RTS#	blue	8
2	Tx	yellow	2
3	CTS#	green	7
4	Rx	red	3
GND	black or white		5

Digikey

Female DB9: AMK-0003 046-0003-ND

Wire#		col	DB-9 position
1	RTS#	white	8
2	Tx	black	2
3	CTS#	red	7
4	Rx	green	3
5	GND	(color??)	5

DB9 pin description

pin	PC(DTE) Function	BF Function
3	Transmit Data	Rx
2	Receive Data	Tx
7	Request to Send	CTS#
8	Clear to Send	RTS#

Software flow control is expected because CTS and RTS are looped back.

On-board RS-232 modular jack

A DB9 connector is too large for the board. Telephone-style jack with 6 pins is used instead. RS-232 pins are not assigned for such jacks. A configurable adapter is used to reassign the pins after the board is deployed.

TYCO RJ11-6Nxxxx $5 (about)
FCI 87180-066LF 609-1057-ND $1.41

Configurable adapter RJ11 --> DB9 by CUI
Male DB9: AMK-0002 046-0002-ND $4.13
Female DB9: AMK-0003 046-0003-ND $4.13

Jameco part numbers (six wire):
66203 Mfg: 31D1-16400-R $2.79

RJ cable

6-wire RJ cable between the adapter and the jack from I.O. Interconnect:

2.1m GLF-466-076-510-D H1663R-07-ND $3.34
7.6m GLF-466-256-511-D H1662R-25-ND $5.54

Jameco part number (7 feet, six wires 6P6C):
115617 Mfg: 306-707SL $1.99

(c) 2015-2016 by SkuTek Instrumentation. All rights reserved.

SkuTek Instrumentation
150 Lucius Gordon Drive
West Henrietta, NY 14586 - 9687
http://www.skutek.com

Page Contents
RS-232

Size	Document Number	Rev
A	DWS00005	1

Date: Monday, March 13, 2017 Sheet 104 of 113