ZBT SRAM 512k * 36 bits

Manufacturer Part Number
71T75602S166PFG
SRAM 18MBIT
166MHZ 100TQFP
800-2322-ND $19.43
D-K: 212 on 04/27/2016

OE# always enabled
Data Sheet p.2

2.5V I/O from FPGA
All IOs on this page are from the 2.5V banks.

58 wires

- ZBT_ben_[0:3] Byte Write Enable
- ZBT_A[0:18]
- ZBT_data[0:31]
- ZBT_clk
- ZBT_R_W#
- ZBT_adv_LD#

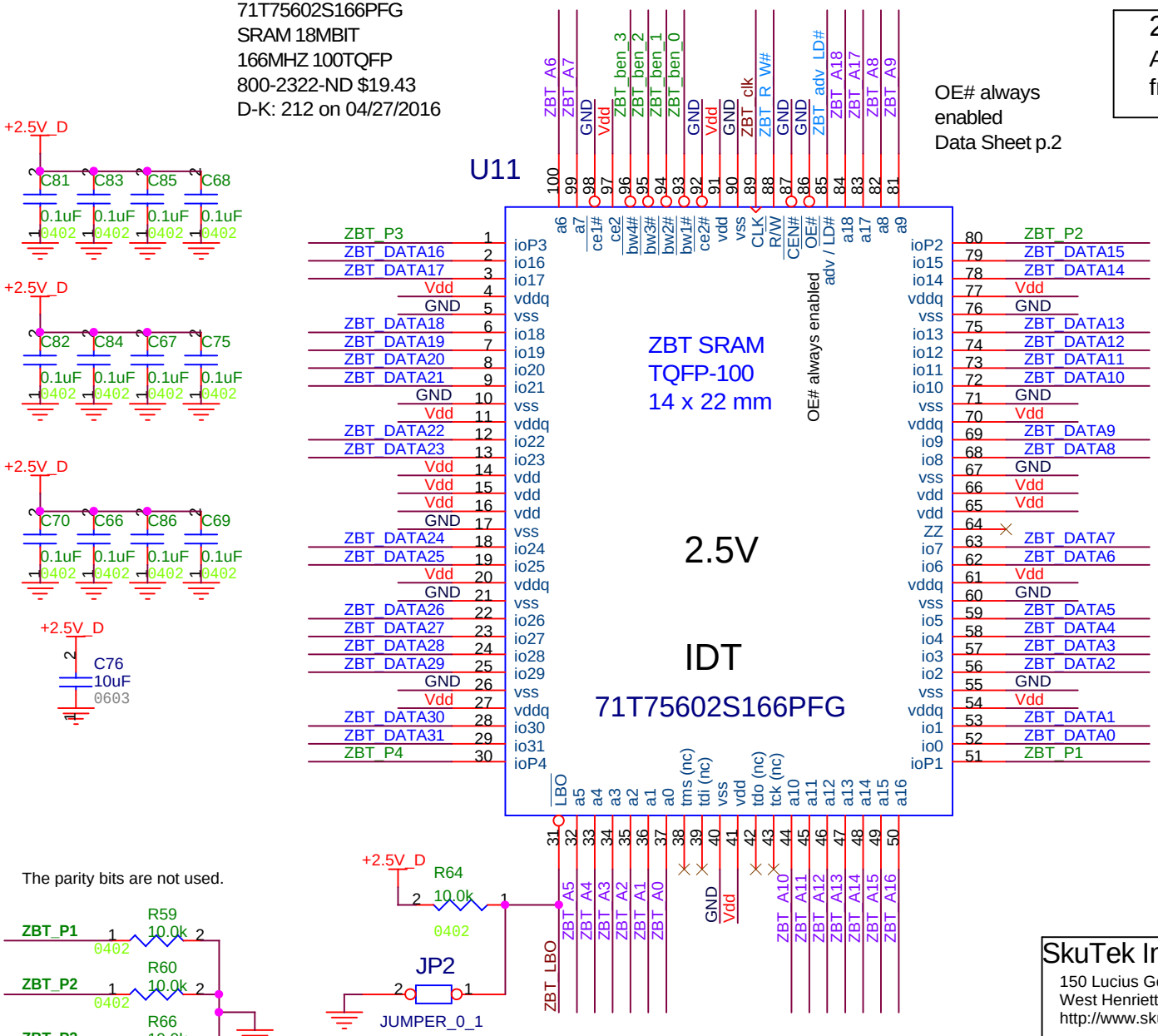

In some cases we need to write individual bytes in order to update video bitmap in the ZBT. The Byte Write Enable bits cannot be statically grounded. They must be actively driven to write individual bytes.

The parity bits are not used.

Linear Burst Order LBO is static. Must not change.
Choose HIGH or LOW according to the Data Sheet.

+2.5V_D Vdd GND

Group 30

SkuTek Instrumentation
150 Lucius Gordon Drive, Ste. 209
West Henrietta, NY 14586 - 9687
http://www.skutek.com

(c) 2016-2017 by SkuTek Instrumentation.
All rights reserved.

Page Contents
ZBT SRAM

Size	Document Number	Rev
A	RiskFive Rainbow	0

Date: Sunday, October 08, 2017 Sheet 18 of 28